OnCell G4302-LTE4 Series

2-port industrial LTE Cat. 4 secure cellular routers

Features and Benefits

- Cellular router/switch/firewall all-in-one solution
- Dual SIM failover and auto connection recovery for reliable cellular connectivity
- Industrial network protection with firewall and Deep Packet Inspection (DPI)
- Supports Secure Boot for checking system integrity
- Centralized monitoring and remote access with Moxa Remote Connect (MRC)

Certifications

EN 50121-4

Introduction

The OnCell G4302-LTE4 Series is a range of all-in-one industrial cellular routers that integrate a 2-port high-performance switch, firewall, and LTE Cat. 4 connectivity to simplify deployment and maintenance efforts. The OnCell G4302-LTE4 Series is certified for in-vehicle systems (E-Mark), ITS infrastructure (NEMA TS2), and oil and gas environments (IECEx, ATEX, CID2), making them ideal for deployments in challenging and highly regulated fields. Designed to act as a wireless backbone for critical industrial applications, they deliver stable Serial/Ethernet-to-cellular connections and ensure optimal reliability with dual SIM failover and GuaranLink cellular auto-recovery.

The OnCell G4302-LTE4 Series protects organizations against threats on multiple fronts. Built from the ground up with security in mind, Secure Boot ensures firmware integrity while the advanced firewall with OT protocol awareness safeguards the network from internal and external threats. Meanwhile, Deep Packet Inspection (DPI) detects and blocks forged or malicious packets. Combined, these features deliver comprehensive, multi-level security for critical operations.

With MRC Quick Link Ultra, operators gain complete visibility and secure remote control over both the OnCell router and its connected end devices, allowing for faster troubleshooting, minimal downtime, and more reliable industrial operations.

Specifications

Cellular Interface

Cellular Standards	LTE CAT 4, HSPA, UMTS, EDGE, GPRS, GSM
Data Rate	20 MHz bandwidth: 150 Mbps DL, 50 Mbps UL
Frequency Bands Supported	-EU(-T) models: LTE B1 (2100 MHz) / B3 (1800 MHz) / B7 (2600 MHz) / B8 (900 MHz) / B20 (800 MHz) / B28 (700 MHz) UMTS/HSPA B1 (2100 MHz) / B8 (900 MHz) GSM/GPRS/EDGE 900 MHz / 1800 MHz -AU(-T) models: LTE B1 (2100 MHz) / B3 (1800 MHz) / B5 (850 MHz) / B7 (2600 MHz) / B8 (900 MHz) / B28 (700 MHz) UMTS/HSPA B1 (2100 MHz) / B5 (850 MHz) / B8 (900 MHz) GSM/GPRS/EDGE 900 MHz / 1800 MHz -US(-T) models: LTE B2 (1900 MHz) / B4 (1700/2100 MHz (AWS)) / B5 (850 MHz) / B12 (700 MHz) / B13 (700 MHz) / B14 (700 MHz) / B66 (1700 MHz) / B25 (1900 MHz) /B26 (850 MHz) /B71 (600 MHz) UMTS/HSPA B2 (1900 MHz) / B4 (1700 MHz (AWS)) / B5 (850 MHz) -JP(-T) models: LTE B1 (2100 MHz) / B3 (1800 MHz) / B8 (900 MHz) / B11 (1500 MHz) / B18 (800 MHz) / B19 (800 MHz) / B21 (1500 MHz)

	UMTS/HSPA B1 (2100 MHz) / B19 (800 MHz)
No. of SIMs	2 Push-eject tray type
SIM Format	Nano SIM
Cellular Antenna Connectors	2 x SMA female

Ethernet Interface

10/100/1000BaseT(X) Ports (RJ45 connector)	2
Standards	IEEE 802.3 for 10BaseT IEEE 802.3u for 100BaseT(X) IEEE 802.3ab for 1000BaseT(X)

GNSS Interface

GNSS Bands	GPS (1575.42 MHz) GLONASS (1597.52 MHz) Galileo (1575.42 MHz) BeiDou (1561.098 MHz)
GNSS Antenna Connectors	1 x SMA female

Input/Output Interface

Digital Output Channels	1 Relay output with current carrying capacity of 1 A @ 24 VDC
Digital Input Channels	1
Digital Inputs	-30 to +3 V for state 0 +13 to +30 V for state 1
Buttons	Reset button

USB Interface

No. of USB Ports	1
USB Connector	USB Type A
USB Standards	USB 2.0[1]

Serial Interface

No. of Ports	1
Connector	DB9 male
Serial Standards	RS-232/422/485
Data Bits	5, 6, 7, 8
Stop Bits	1, 1.5, 2
Parity	None Even Odd
Bitrate	300 bps to 921.6 kbps
Console Port	RS-232 (TxD, RxD, GND), USB type-C (115200, n, 8, 1)[2]

1. For use with ABC-02.
2. We recommend using the Moxa CBL-USBCF9-GY-150 console cable, which can be purchased separately.

Serial Signals

RS-232	TxD, RxD, RTS, CTS, DTR, DSR, DCD, GND
RS-422	Tx+, Tx-, Rx+, Rx-, GND
RS-485-2w	Data+, Data-, GND
RS-485-4w	Tx+, Tx-, Rx+, Rx-, GND

Operation Modes

Standards	Real COM mode RFC2217 mode TCP Client mode TCP Server mode UDP mode SCATS

LED Interface

LED Indicators	PWR1, PWR2, STATE, USB, SIM1, SIM2, CELL, LTE, GNSS, SERIAL, VPN

Wireless Software Features

Management	GuaranLink Send SMS SMS Remote Control Moxa Remote Connect (MRC)

Ethernet Software Features

Management	DHCP Server/Client DNS Syslog MXview One MXconfig MXsecurity Power Management
Broadcast Forwarding	IP directed broadcast, broadcast forwarding
Configuration Options	Serial Console[3] Web Console (HTTP/HTTPS) Command Line Interface (CLI) through Serial/Telnet/SSH
Network Protocols	LLDP SMTP SNMPv1/v2c/v3 TFTP TCP/IP UDP IPv4 ARP HTTP/HTTPS Telnet SSH
Filter	802.1Q VLAN Port-based VLAN
Unicast Routing	OSPF RIPV1/V2 Static Route
Multicast Routing	Static Route
Routing Redundancy	VRRP
Time Management	NTP Server/Client

3. We recommend using the Moxa CBL-USBCF9-GY-150 console cable, which can be purchased separately.

	SNTP
Tunneling	GRE
VPN	IPsec OpenVPN

Security Functions

Hardware-based Security	Secure Boot
Password	User-level password protection
Authentication	Local database RADIUS Access Control List

DoS and DDoS Protection

Technology	ARP-Flood FIN Scan ICMP Flood TCP Sessions Without SYN NMAP-ID Scan NMAP-Xmas Scan Null Scan SYN/FIN Scan SYN/RST Scan SYN-Flood Xmas Scan

Firewall

Filter	DDoS Ethernet protocols ICMP IP address MAC address Ports
Deep Packet Inspection	Modbus TCP Modbus UDP DNP3 IEC 60870-5-104 IEC 61850 MMS EtherNet/IP MELSEC Omron FINS OPC UA Siemens S7 Comm. Siemens S7 Comm. Plus Additional protocols will be supported through future firmware updates.

NAT

Features	1-to-1 N-to-1 PAT NAT loopback Double NAT

IPsec VPN

Authentication	MD5 and SHA (SHA-256) RSA (key size: 1024-bit, 2048-bit) Pre-shared Key or X.509 v3 certificate
Encryption	DES 3DES AES-128 AES-192 AES-256 AES-256-GCM
Concurrent VPN Tunnels	Max. 15 IPsec VPN tunnels

OpenVPN

OpenVPN	OpenVPN (client)
Encryption	AES-128/192/256 CBC AES-128/192/256 GCM CHACHA20-POLY1305

Power Parameters

Input Current	0.96 A @ 12 VDC (max.) 0.63 A @ 12 VDC (average) 0.33 A @ 24 VDC (average) 0.18 A @ 48 VDC (average)
Input Voltage	12 to 48 VDC Redundant dual inputs
Power Consumption	170 mW (idle) 7.6 W (typ.) 11.52 W (max.)
Power Connector	Screw-locked terminal block
Reverse Polarity Protection	Supported

Physical Characteristics

Housing	Metal
Dimensions	125 x 46.2 x 100 mm (4.92 x 1.82 x 3.94 in)
Weight	610 g (1.34 lb)
Installation	DIN-rail mounting Wall mounting (with optional kit)
IP Rating	IP40[4]

Environmental Limits

Operating Temperature	Standard models: -10 to 55°C (14 to 131°F) Wide temp. models: -30 to 70°C (-22 to 158°F)
Storage Temperature (package included)	-40 to 85°C (-40 to 185°F)
Ambient Relative Humidity	5 to 95% (non-condensing)

Standards and Certifications

EMC	EN 55032/35 EN 61000-6-2/-6-4
EMI	CISPR 22, FCC Part 15B Class A

4. With the rubber SIM slot cover closed.

EMS	IEC 61000-4-2 ESD: Contact: 8 kV; Air: 15 kV IEC 61000-4-3 RS: 80 MHz to 1 GHz: 10 V/m IEC 61000-4-4 EFT: Power: 2 kV; Signal: 2 kV IEC 61000-4-5 Surge: Power: 2 kV, Signal: 2 kV IEC 61000-4-6 CS: 10 kHz to 150 MHz; Signal: 80 V IEC 61000-4-8: 30 A/m
Freefall	IEC 60068-2-32
Hazardous Locations	IECEx[5] ATEX[5] Class I Division 2[5]
Railway	EN 50121-4
Traffic Control	NEMA TS2
Road Vehicles	E mark E1
Radio Frequency	FCC ID N7NWP76B PTCRB EN 303 413
Radio	RCM UKCA IC: 2417C-WP76B NCC: CCAH234G0310T1 TELEC: R 003-190014/T D190010003 KC: R-R-MXA-OnCell-G4302 SRRC: 26C71PK6G002
Carrier Approvals	Verizon AT&T
Cellular Standards	EN 301 489-1/-19 (GPS) EN 301 489-1/-52 (WCDMA/LTE) EN 301 511 EN 301908-1/-2/-13
Cybersecurity	EN 18031-1
Safety	UL 62368-1 EN 62368-1
Shock	IEC 60068-2-27
Vibration	IEC 60068-2-6

MTBF

Time	-AU(-T) models: 518,722 hrs -EU(-T) models: 518,722 hrs -JP(-T) models: 522,186 hrs -US(-T) models: 521,746 hrs
Standards	Telcordia Standard SR-332

Warranty

Warranty Period	5 years
Details	See www.moxa.com/warranty

5. Supports for Hardware Rev 1.1.0 and above

Package Contents

Device	1 x OnCell G4302-LTE4 Series secure cellular router
Documentation	1 x quick installation guide 1 x warranty card
Installation Kit	1 x DIN-rail kit

Dimensions

Unit: mm (inch)

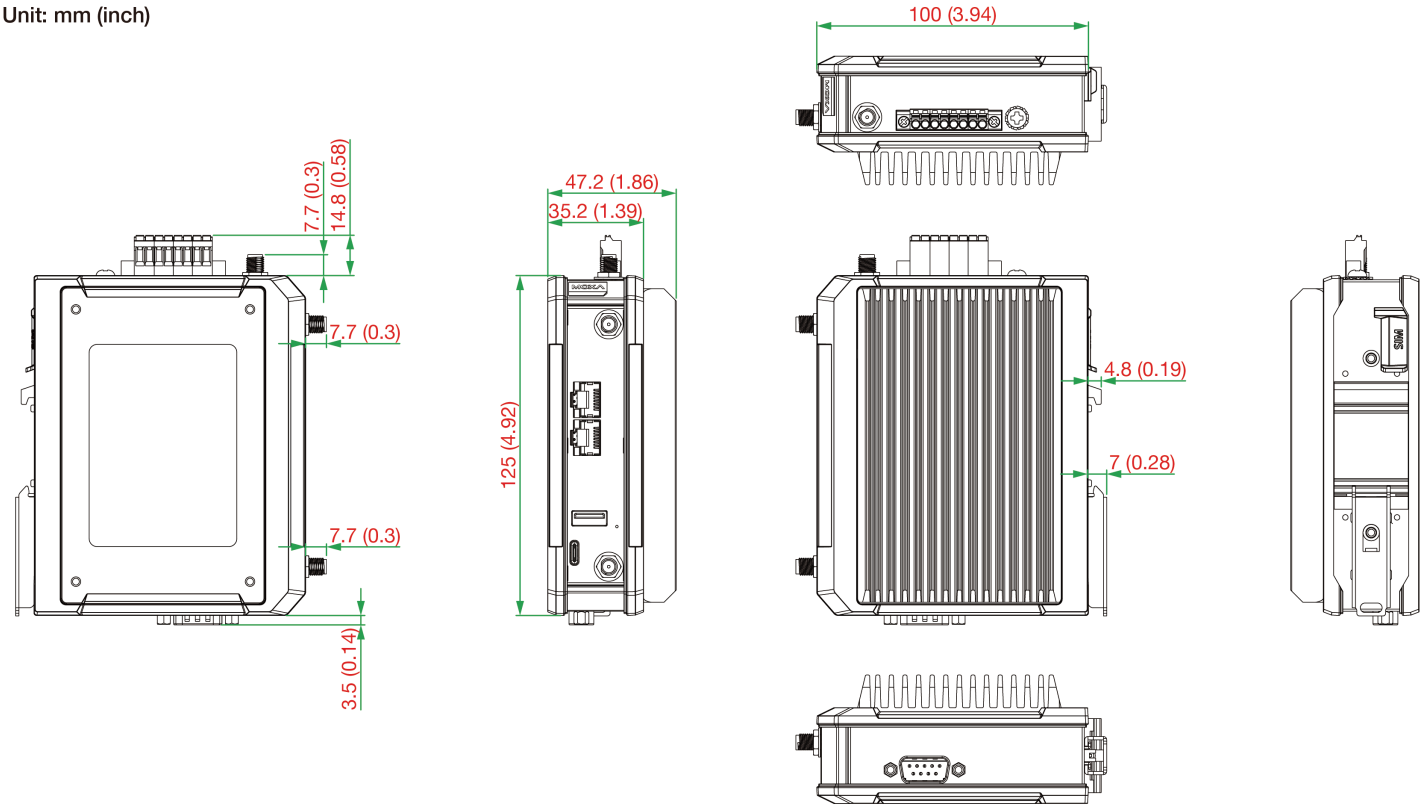

Ordering Information

Model Name	LTE Band	Operating Temp.
OnCell G4302-LTE4-EU	B1 (2100 MHz) / B3 (1800 MHz) / B7 (2600 MHz) / B8 (900 MHz) / B20 (800 MHz) / B28 (700 MHz)	-10 to 55°C
OnCell G4302-LTE4-EU-T	B1 (2100 MHz) / B3 (1800 MHz) / B7 (2600 MHz) / B8 (900 MHz) / B20 (800 MHz) / B28 (700 MHz)	-30 to 70°C
OnCell G4302-LTE4-AU	B1 (2100 MHz) / B3 (1800 MHz) / B5 (850 MHz) / B7 (2600 MHz) / B8 (900 MHz) / B28 (700 MHz)	-10 to 55°C
OnCell G4302-LTE4-AU-T	B1 (2100 MHz) / B3 (1800 MHz) / B5 (850 MHz) / B7 (2600 MHz) / B8 (900 MHz) / B28 (700 MHz)	-30 to 70°C
OnCell G4302-LTE4-US	B2 (1900 MHz) / B4 (1700/2100 MHz (AWS)) / B5 (850 MHz) / B12 (700 MHz) / B13 (700 MHz) / B14 (700 MHz) / B25 (1900 MHz) /B26 (850 MHz) / B66 (1700 MHz) / B71 (600 MHz)	-10 to 55°C
OnCell G4302-LTE4-US-T	B2 (1900 MHz) / B4 (1700/2100 MHz (AWS)) / B5 (850 MHz) / B12 (700 MHz) / B13 (700 MHz) / B14 (700 MHz) / B25 (1900 MHz) /B26 (850 MHz) / B66 (1700 MHz) / B71 (600 MHz)	-30 to 70°C
OnCell G4302-LTE4-JP	B1 (2100 MHz) / B3 (1800 MHz) / B8 (900 MHz) / B11 (1500 MHz) / B18 (800 MHz) / B19 (800 MHz) / B21 (1500 MHz)	-10 to 55°C
OnCell G4302-LTE4-JP-T	B1 (2100 MHz) / B3 (1800 MHz) / B8 (900 MHz) / B11 (1500 MHz) / B18 (800 MHz) / B19 (800 MHz) / B21 (1500 MHz)	-30 to 70°C

Accessories (sold separately)

Storage Kits

ABC-02-USB	Configuration backup and restoration tool, firmware upgrade, and log file storage tool for managed Ethernet switches and routers, 0 to 60°C operating temperature
ABC-02-USB-T	Configuration backup and restoration tool, firmware upgrade, and log file storage tool for managed Ethernet switches and routers, -40 to 75°C operating temperature

Antennas

ANT-5G-ASM-03	3 dBi GSM/UMTS/LTE/5G NR dipole antenna with SMA (male) connector
MAT-5G-PA-SM-2-06-3m	6 dBi MIMO panel antenna with 2 SMA (male) connectors for cellular applications, 3 m cable
MAT-5G-PA-SM-3-06-3m	6 dBi MIMO panel antenna with 3 SMA (male) connectors for cellular and GNSS applications, 3 m cable
ANT-GNSS-CSM-02-3m	2 dBic GNSS antenna with SMA (male) connector, 3 m cable

Wireless Antenna Cables

A-CRF-SMSF-R3-100	Wireless antenna cable with SMA (male) to SMA (female) connectors, magnetic base, RG-174 type, 1 m
A-CRF-SMSF-L1-300	Wireless antenna cable with SMA (male) to SMA (female) connectors, magnetic base, LMR195 type, 3 m
A-CRF-SMSF-C2-300	Wireless antenna cable with SMA (male) to SMA (female) connectors, CFD-200 type, 3 m
A-CRF-SMSF-C2-500	Wireless antenna cable with SMA (male) to SMA (female) connectors, CFD-200 type, 5 m

Mounting Kits

WK-41-01	Wall-mounting kit with 1 plate (41 x 144 x 7.5 mm)
WK-160-01	Wall-mounting kit with 1 plate (160 x 89 x 2.0 mm), 4 screws, black

Software

LIC-MXviewOne-NEW-XN-SR	MXview One node license with customizable node quantity (minimum 1 node)
LIC-MXsecurity-NEW-XN-SR	MXsecurity perpetual node license with customizable node quantity (minimum 1 node)

© Moxa Inc. All rights reserved. Updated Oct 19, 2026.

This document and any portion thereof may not be reproduced or used in any manner whatsoever without the express written permission of Moxa Inc. Product specifications subject to change without notice. Visit our website for the most up-to-date product information.