NPort 5100A Series

1-port RS-232/422/485 serial device servers with serial surge protection

Features and Benefits

- Power consumption of only 1 W
- Fast 3-step web-based configuration
- Surge protection for serial, Ethernet, and power
- COM port grouping and UDP multicast applications
- Screw-type power connectors for secure installation
- Real COM and TTY drivers for Windows, Linux, and macOS
- Standard TCP/IP interface and versatile TCP and UDP operation modes
- Connects up to 8 TCP hosts

Certifications

Introduction

The NPort® 5100A device servers are designed to make serial devices network-ready in an instant and give your PC software direct access to serial devices from anywhere on the network. The NPort® 5100A device servers are ultra-lean, ruggedized, and user-friendly, making simple and reliable serial-to-Ethernet solutions possible.

A Greener Serial-to-Ethernet Solution

The MiiNe is a small but powerful Arm-based serial-to-Ethernet SoC with RAM and Flash embedded. With the MiiNe inside, the NPort® 5110A Series' power consumption is less than 1 W. The NPort® 5100A Series saves at least 50% on power consumption compared to existing solutions on the market, helping engineers meet the tough environmental compliance challenges found in today's industrial environments.

Surge Protection for Serial, Ethernet, and Power

Surge, which is typically caused by high voltages that result from switching and lightning transients, is a common threat to all electrical devices. Moxa's leading-edge surge immunity solution, which is applied to the NPort® 5100A's serial, power, and Ethernet lines, is tested and proven compliant with IEC 61000-4-5. This state-of-the-art surge protection provides a robust serial-to-Ethernet solution that can protect electrical devices from voltage spikes and withstand electrically noisy environmental conditions.

3-Step Web-based Configuration

The NPort® 5100A's 3-step web-based configuration tool is straightforward and user-friendly. The NPort® 5100A's web console guides users through three simple configuration steps that are necessary to activate the serial-to-Ethernet application. With this fast 3-step web-based configuration, a user only needs to spend an average of 30 seconds to complete the NPort® settings and enable the application, saving a great amount of time and effort.

Easy to Troubleshoot

NPort® 5100A device servers support SNMP, which can be used to monitor all units over Ethernet. Each unit can be configured to send trap messages automatically to the SNMP manager when user-defined errors are encountered. For users who do not use SNMP manager, an email alert can be sent instead. Users can define the trigger for the alerts using Moxa's Windows utility, or the web console. For example, alerts can be triggered by a warm start, a cold start, or a password change.

Appearance

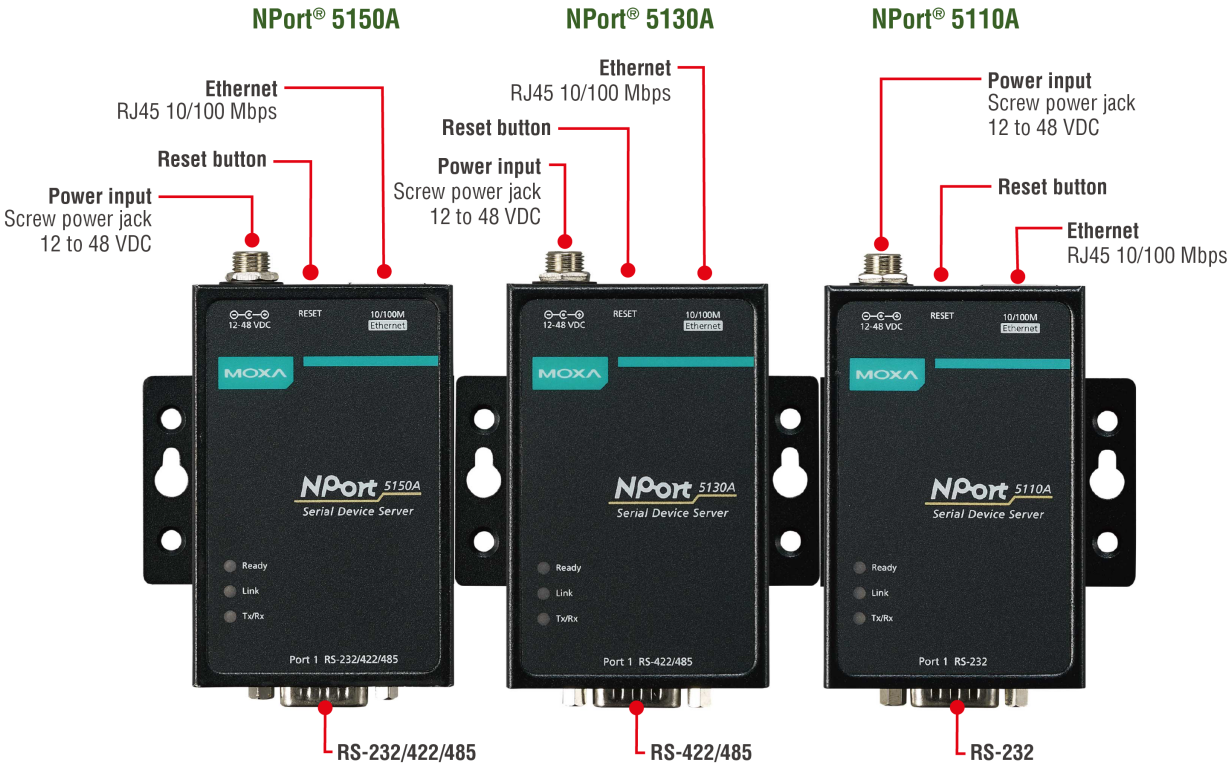

Specifications

Ethernet Interface	
10/100BaseT(X) Ports (RJ45 connector)	1
Magnetic Isolation Protection	1.5 kV (built-in)

Ethernet Software Features	
Configuration Options	Windows Utility Web Console (HTTP/HTTPS) Device Search Utility (DSU) MCC Tool Telnet Console Serial Console (NPort 5110A/5150A models)
Management	DHCP Client ARP BOOTP DNS HTTP HTTPS ICMP IPv4 LLDP SMTP SNMPv1/v2c TCP/IP Telnet UDP
Filter	IGMP v1/v2
Windows Real COM Drivers	Windows 11, 10, 8.1, 8, 7, Vista, XP, ME, 98, and 95 Windows Server 2025, 2022, 2019, 2016, 2012 R2, 2012, 2008 R2, 2008, 2003, 2000, and NT Windows Embedded CE 6.0 and 5.0, Windows XP Embedded
Linux Real TTY Drivers	Kernel versions: 6.x, 5.x, 4.x, 3.x, 2.6.x, and 2.4.x

Fixed TTY Drivers	macOS versions: 26, 15, 14, 13, 12, 11, and 10.1x SCO UNIX, SCO OpenServer, UnixWare 7, QNX 4.25, QNX 6, Solaris 10, FreeBSD, AIX 5.x, HP-UX 11i, Mac OS X
Arm®-based Platform Support	Windows 11 Linux kernel 6.x, 5.x, and 4.x macOS 26, 15, 14, 13, 12 and 11
Virtual Machine	VMWare ESXi (Windows 11/10) VMware Fusion (Windows on macOS 26, 15, 14, 13, 12 and 11) Parallels Desktop (Windows on macOS 26, 15, 14, 13, 12 and 11
Android API	Android 3.1.x and later
MIB	RFC1213, RFC1317

Security Functions

Authentication	Local database
Encryption	HTTPS AES-128 SHA-1 RSA-1024 SHA-256
Security Protocols	HTTPS (TLS 1.2)

Serial Interface

Connector	DB9 male
No. of Ports	1
Serial Standards	NPort 5110A: RS-232 NPort 5130A: RS-422, RS-485 NPort 5150A: RS-232, RS-422, RS-485
Operation Modes	Disabled Ethernet Modem Pair Connection Real COM Reverse Telnet RFC2217 TCP Client TCP Server UDP
Bitrate	Supports standard baudrates (unit=bps): 50, 75, 110, 134, 150, 300, 600, 1200, 1800, 2400, 4800, 7200, 9600, 19200, 38400, 57600, 115200, 230.4k, 460.8k, 921.6k
Data Bits	5, 6, 7, 8
Stop Bits	1, 1.5, 2
Parity	None, Even, Odd, Space, Mark
Flow Control	RTS/CTS (RS-232 only) DTR/DSR (RS-232 only) XON/XOFF
Pull High/Low Resistor for RS-485	1 kilo-ohm, 150 kilo-ohms
RS-485 Data Direction Control	NPort 5150A/5150A-T/5130A/5130A-T: ADDC (automatic data direction control)

Serial Signals

RS-232	NPort 5110A: TxD, RxD, RTS, CTS, DTR, DSR, DCD, GND NPort 5110A-T: TxD, RxD, RTS, CTS, DTR, DSR, DCD, GND NPort 5150A: TxD, RxD, RTS, CTS, DTR, DSR, DCD, GND NPort 5150A-T: TxD, RxD, RTS, CTS, DTR, DSR, DCD, GND
RS-422	NPort 5130A: Tx+, Tx-, Rx+, Rx-, GND NPort 5130A-T: Tx+, Tx-, Rx+, Rx-, GND NPort 5150A: Tx+, Tx-, Rx+, Rx-, GND NPort 5150A-T: Tx+, Tx-, Rx+, Rx-, GND
RS-485-4w	NPort 5130A: Tx+, Tx-, Rx+, Rx-, GND NPort 5130A-T: Tx+, Tx-, Rx+, Rx-, GND NPort 5150A: Tx+, Tx-, Rx+, Rx-, GND NPort 5150A-T: Tx+, Tx-, Rx+, Rx-, GND
RS-485-2w	NPort 5130A: Data+, Data-, GND NPort 5130A-T: Data+, Data-, GND NPort 5150A: Data+, Data-, GND NPort 5150A-T: Data+, Data-, GND

Power Parameters

No. of Power Inputs	1
Input Current	NPort 5110A: 82.5 mA @ 12 VDC NPort 5130A: 89.1 mA @ 12 VDC NPort 5150A: 92.4 mA @ 12 VDC
Input Voltage	12 to 48 VDC
Source of Input Power	Power input jack

Reliability

Automatic Reboot Trigger	Built-in WDT

Physical Characteristics

Housing	Metal
Dimensions (with ears)	75.2 x 80 x 22 mm (2.96 x 3.15 x 0.87 in)
Dimensions (without ears)	52 x 80 x 22 mm (2.05 x 3.15 x 0.87 in)
Weight	340 g (0.75 lb)
Installation	Desktop DIN-rail mounting (with optional kit) Wall mounting

Environmental Limits

Operating Temperature	Standard models: 0 to 60°C (32 to 140°F) Wide temp. models: -40 to 75°C (-40 to 167°F)
Storage Temperature (package included)	-40 to 75°C (-40 to 167°F)
Ambient Relative Humidity	5 to 95% (non-condensing)

Standards and Certifications

EMC	EN 55032/35
EMI	CISPR 32, FCC Part 15B Class A

EMS	IEC 61000-4-2 ESD: Contact: 6 kV; Air: 8 kV IEC 61000-4-3 RS: 80 MHz to 1 GHz: 10 V/m IEC 61000-4-4 EFT: Power: 2 kV; Signal: 1 kV IEC 61000-4-5 Surge: Power: 2 kV; Signal: 0.5 kV IEC 61000-4-6 CS: 150 kHz to 80 MHz: 10 V/m; Signal: 10 V/m IEC 61000-4-8 PFMF IEC 61000-4-11
Safety	UL 60950-1

Declaration

Green Product	RoHS, CRoHS, WEEE

MTBF

Time	2,231,530 hrs
Standards	Telcordia (Bellcore) Standard TR/SR

Warranty

Warranty Period	5 years
Details	See www.moxa.com/warranty

Package Contents

Device	1 x NPort 5100A Series device server
Power Supply	NPort 5110A: 1 x power adapter, suitable for your region NPort 5130A: 1 x power adapter, suitable for your region NPort 5150A: 1 x power adapter, suitable for your region
Documentation	1 x quick installation guide 1 x warranty card

Dimensions

NPort 5110A

Unit: mm (inch)

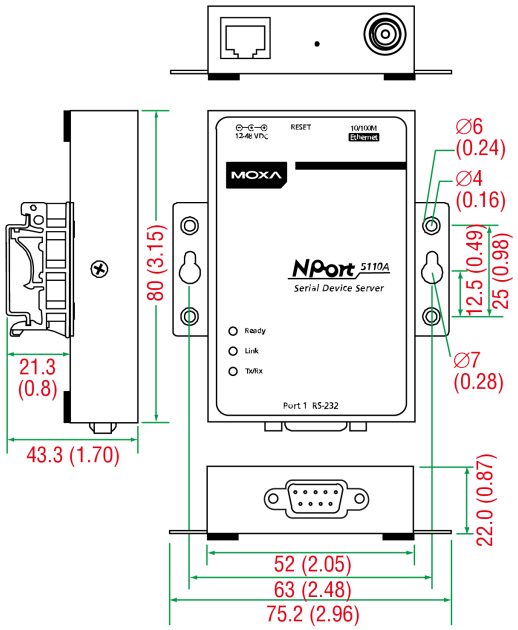

NPort 5130A

Unit: mm (inch)

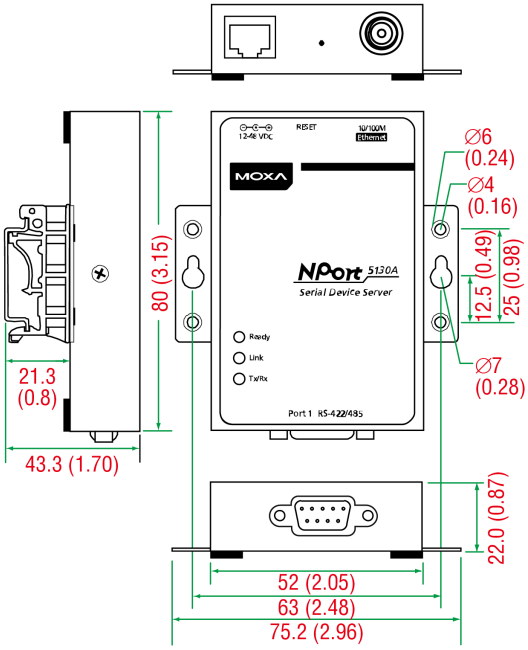

NPort 5150A

Unit: mm (inch)

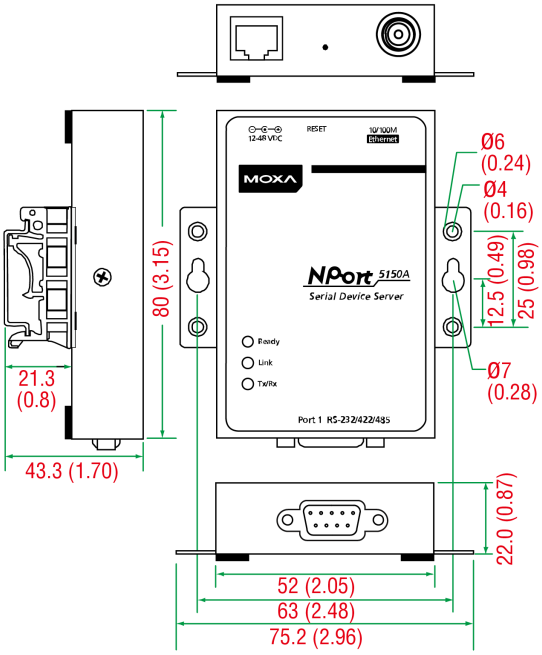

Ordering Information

Model Name	Operating Temp.	Baudrate	Serial Standards	No. of Serial Ports	Input Current	Input Voltage
NPort 5110A	0 to 60°C	50 bps to 921.6 kbps	RS-232	1	82.5 mA @ 12 VDC	12-48 VDC
NPort 5110A-T	-40 to 75°C	50 bps to 921.6 kbps	RS-232	1	82.5 mA @ 12 VDC	12-48 VDC
NPort 5130A	0 to 60°C	50 bps to 921.6 kbps	RS-422/485	1	89.1 mA @ 12 VDC	12-48 VDC

Model Name	Operating Temp.	Baudrate	Serial Standards	No. of Serial Ports	Input Current	Input Voltage
NPort 5130A-T	-40 to 75°C	50 bps to 921.6 kbps	RS-422/485	1	89.1 mA @ 12 VDC	12-48 VDC
NPort 5150A	0 to 60°C	50 bps to 921.6 kbps	RS-232/422/485	1	92.4 mA @ 12 VDC	12-48 VDC
NPort 5150A-T	-40 to 75°C	50 bps to 921.6 kbps	RS-232/422/485	1	92.4 mA @ 12 VDC	12-48 VDC

Accessories (sold separately)

Cables

CBL-F9M9-20	DB9 female to DB9 male serial cable, 20 cm
CBL-F9M9-150	DB9 female to DB9 male serial cable, 1.5 m

Connectors

ADP-RJ458P-DB9F	DB9 female to RJ45 connector
Mini DB9F-to-TB	DB9 female to terminal block connector

DIN-Rail Mounting Kits

DK35A	DIN-rail mounting kit, 35 mm

Power Adapters

PWR-12050-USJP-S1	Locking barrel plug, 12 VDC, 0.5 A, 100 to 240 VAC, US/JP plug, 0 to 40°C operating temperature
PWR-12050-EU-S1	Locking barrel plug, 12 VDC, 0.5 A, 100 to 240 VAC, EU plug, 0 to 40°C operating temperature
PWR-12050-CN-S1	Locking barrel plug, 12 VDC, 0.5 A, 100 to 240 VAC, CN plug, 0 to 40°C operating temperature
PWR-12050-UK-S1	Locking barrel plug, 12 VDC, 0.5 A, 100 to 240 VAC, UK plug, 0 to 40°C operating temperature
PWR-12050-AU-S1	Locking barrel plug, 12 VDC, 0.5 A, 100 to 240 VAC, AU plug, 0 to 40°C operating temperature
PWR-12050-KR-S1	Locking barrel plug, 12 VDC, 0.5 A, 100 to 240 VAC, KR plug, 0 to 40°C operating temperature
PWR-12150-AU-SA-T	Locking barrel plug, 12 VDC, 1.5 A, 100 to 240 VAC, AU plug, -40 to 75°C operating temperature Applicable Models: NPort 5110A-T NPort 5130A-T NPort 5150A-T
PWR-12150-CN-SA-T	Locking barrel plug, 12 VDC, 1.5 A, 100 to 240 VAC, CN plug, -40 to 75°C operating temperature Applicable Models: NPort 5110A-T NPort 5130A-T NPort 5150A-T
PWR-12150-EU-SA-T	Locking barrel plug, 12 VDC, 1.5 A, 100 to 240 VAC, EU plug, -40 to 75°C operating temperature Applicable Models: NPort 5110A-T NPort 5130A-T NPort 5150A-T
PWR-12150-UK-SA-T	Locking barrel plug, 12 VDC, 1.5 A, 100 to 240 VAC, UK plug, -40 to 75°C operating temperature Applicable Models: NPort 5110A-T NPort 5130A-T NPort 5150A-T
PWR-12150-USJP-SA-T	Locking barrel plug, 12 VDC 1.5 A, 100 to 240 VAC, US/JP plug, -40 to 75°C operating temperature Applicable Models: NPort 5110A-T NPort 5130A-T NPort 5150A-T

© Moxa Inc. All rights reserved. Updated Oct 27, 2026.

This document and any portion thereof may not be reproduced or used in any manner whatsoever without the express written permission of Moxa Inc. Product specifications subject to change without notice. Visit our website for the most up-to-date product information.