CP-132N Series

2-port RS-422/485 Mini PCI Express boards

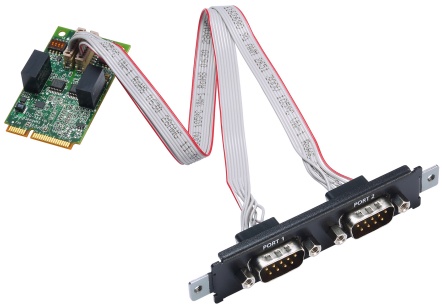

Features and Benefits

- PCI Express 1.0 bus support
- 921.6 kbps maximum baudrate for fast data transmission
- 128-byte FIFO and on-chip H/W, S/W flow control
- Drivers provided for a broad selection of operating systems, including Windows and Linux

Certifications

Introduction

The CP-132N is a Mini PCI Express multiport serial board designed for various applications and users such as system integrators and industrial automation system and industrial PC manufacturers.

The CP-132N is compatible with most popular operating systems and supports data rates up to 921.6 kbps. It also provides 1 kV line-to-line surge protection and 2.5 kV isolation (for the I model), ensuring compatibility with a wide range of industrial environments. Furthermore, the CP-132N is embedded with a DIP switch for easy adjusting of the terminal and pull-high/low resistors for various environments and applications.

RS-485 Multidrop for up to 31 Devices Within 1.2 km

The CP-132N Series boards have two RS-422/485 serial ports, each of which can achieve data rates up to 921.6 kbps. In RS-485 mode, the boards can connect up to 31 daisy-chained RS-485 devices within a range of 1.2 km. For long-distance RS-485 communication, choose the CP-132N-I-T model, which comes with 2.5 kV electrical isolation protection to prevent equipment damage.

A New Family of Mini PCI Express Multiport Serial Boards for Faster Time to Market

Moxa's new Mini PCI Express multiport serial board family fulfills the need for customized expansion and enables faster time to market for OEMs and system integrators. It includes Isolated and non-Isolated RS-232/422/485 communication cards for various applications.

The serial boards feature high performance 16C950 compatible UARTs and are available in 4-port and 2-port versions compatible with all popular operating systems. They support data rates of up to 921.6 kbps and have 128-byte transmit and receive FIFOs. The serial boards can operate in the -40 to 85°C temperature range. Door brackets are included in the package for all models, enabling the installation of the serial boards in a Moxa IPC expansion slot.

Specifications

Serial Interface

Comm. Controller	16C550C compatible
Bus	PCI Express 1.0
Connector	DB9 male
FIFO	128 bytes
No. of Ports	2
Baudrate	50 bps to 921.6 kbps (supports non-standard baudrates)
Data Bits	5, 6, 7, 8
Stop Bits	1, 1.5, 2

Parity	None Even Odd Space Mark
Flow Control	None XON/XOFF
Serial Standards	RS-422 RS-485
Isolation	CP-132N-I-T: 2.5 kV

Serial Signals

RS-422	Tx+, Tx-, Rx+, Rx-, GND
RS-485-4w	Tx+, Tx-, Rx+, Rx-, GND
RS-485-2w	Data+, Data-, GND

Serial Software Features

Windows Drivers	Windows 11/10/8.1/8/7 Windows Server 2025/2022/2019/2016/2012 R2/2012/2008 R2
Linux Drivers	Linux kernel 7.x/6.x/5.x/4.x

Power Parameters

Input Current	CP-132N-I-T: 533 mA @ 3.3 VDC CP-132N-T: 487 mA @ 3.3 VDC

Physical Characteristics

Dimensions	30 x 50.95 mm (1.18 x 2 in)

Environmental Limits

Operating Temperature	-40 to 85°C (-40 to 185°F)
Storage Temperature (package included)	-40 to 85°C (-40 to 185°F)
Ambient Relative Humidity	5 to 95% (non-condensing)

Standards and Certifications

EMC	EN 55032/35
EMI	CISPR 32, FCC Part 15B Class B
EMS	IEC 61000-4-2 ESD: Contact: 4 kV; Air: 8 kV IEC 61000-4-3 RS: 80 MHz to 1 GHz: 3 V/m IEC 61000-4-4 EFT: Power: 1 kV; Signal: 0.5 kV IEC 61000-4-5 Surge: Power: 2 kV; Signal: 1 kV IEC 61000-4-6 CS: 150 kHz to 80 MHz: 3 V/m; Signal: 3 V/m IEC 61000-4-8 PFMF

Declaration

Green Product	RoHS, CRoHS, WEEE

MTBF

Time	CP-132N-T: 4,128,967 hrs CP-132N-I-T: 3,583,931 hrs
Standards	Telcordia (Bellcore) Standard TR/SR

Warranty

Warranty Period	5 years
Details	See www.moxa.com/warranty

Package Contents

Device	1 x CP-132N Series serial board
Cable	2 x 10-pin female to 1 DB9 male serial cable, 25 cm
Installation Kit	Door/CP-100N Port12
Documentation	1 x quick installation guide 1 x warranty card

Dimensions

CP-132N-T

Unit: mm

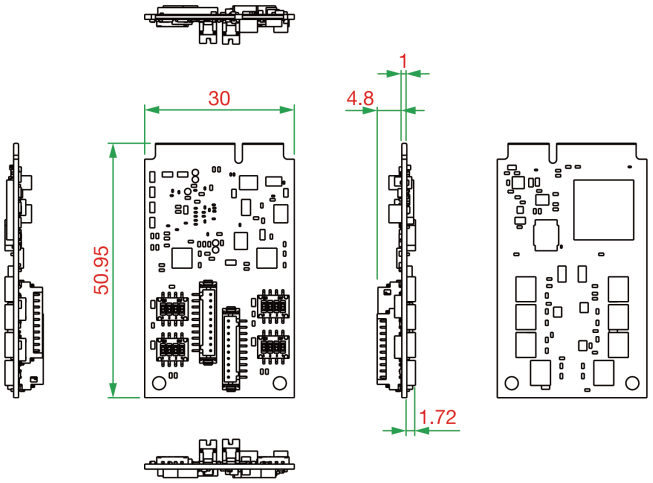

CP-132N-I-T

Unit: mm

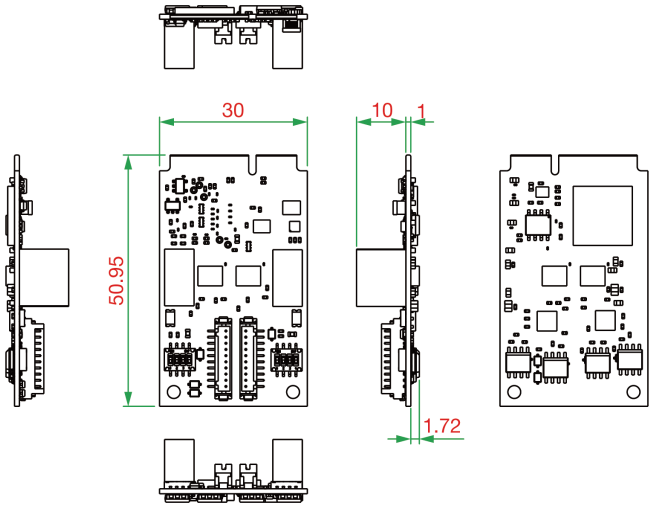

Ordering Information

Model Name	Serial Standards	No. of Serial Ports	Serial Isolation Protection
CP-132N-T	RS-422/485	2	–
CP-132N-I-T	RS-422/485	2	2.5 kV

Accessories (sold separately)

Connectors

Mini DB9F-to-TB	DB9 female to terminal block connector

© Moxa Inc. All rights reserved. Updated Sep 16, 2026.

This document and any portion thereof may not be reproduced or used in any manner whatsoever without the express written permission of Moxa Inc. Product specifications subject to change without notice. Visit our website for the most up-to-date product information.